AUTODESK FUSION 360

2026

BLOG

www.cadin360.com

cadin360°
Learning Tutorials

A Note to Our Readers

2026

This blog has been created using a combination of artificial intelligence tools and human review to help deliver clear, structured, and up-to-date learning content.

All technical topics, examples, and workflows are curated to support learning and skill development. While every effort is made to ensure accuracy and clarity, readers are encouraged to validate concepts through hands-on practice and documentation. Our goal is to make learning more accessible, efficient, and practical for everyone.

Disclaimer:

All product names, logos, brands, and registered trademarks mentioned in this publication are the property of their respective owners and are used for identification purposes only.

— CADIN360 Team

HOW TO ADD LEADER NOTES IN FUSION 360

• LEARN • • APPLY • • GROW •

Introduction

Adding leader notes in Fusion 360 is essential for documenting your designs, providing annotations, or adding instructions directly within your models. Leader notes help communicate important details to team members, clients, or yourself during the design process. If you're looking to streamline your workflow and enhance your annotation process, understanding how to add leader notes effectively is key. In this comprehensive guide, you'll learn step-by-step how to add leader notes in Fusion 360, practical tips, common mistakes to avoid, and best practices to ensure your annotations enhance your design clarity.

Understanding Leader Notes in Fusion 360

Leader notes are annotations with customizable leaders (lines or arrows) pointing to specific features or parts of your design. They are vital for explanations, manufacturing notes, or design modifications. Fusion 360 provides an intuitive way to add these notes, primarily through the **Text** tool combined with the **Sketch** environment, which allows for flexible and detailed annotations.

How to Add Leader Notes in Fusion 360: Step-by-Step Guide

Adding leader notes requires a combination of sketching, text, and annotation features. Follow these steps for a clear and efficient process:

1. Prepare Your Model

- Open your design in Fusion 360.
- Ensure your model is fully modeled and orientated correctly.
- Decide where you want to place your leader note for maximum clarity.

2. Start a New Sketch

- Select the face or plane where you want your leader note to be attached.
- Click on the **Create Sketch** button from the Toolbar.

- This opens the sketch environment for drawing and annotation.

3. Draw the Leader Line

- Choose the **Line** tool from the Sketch dropdown.
- Draw a straight line from the feature or area you want to annotate toward the designated note location.
- To create a leader with an arrowhead, draw the line with a slight angle pointing to your area of interest.

4. Add the Text Annotation

- Select the **Text** tool within the sketch environment.
- Click on the endpoint of your leader line where you want the text to appear.
- Enter your annotation or note content in the text box.
- Adjust the font size and style as needed for clarity.

5. Place the Leader Note

- Position the text box along the line without overlapping other features.
- Use constraints or the move tool to precisely place your note for readability.

6. Finish the Sketch

- Once your leader line and text annotation are placed, click **Finish Sketch**.
- Your leader note will now be part of your model's annotation layer.

7. Fine-tune for Clarity

- If needed, go back into the sketch to adjust the leader line or text position.

- Use the **Move/Copy** tool for precise placement.
- Consider combining multiple leader notes for comprehensive documentation.

Practical Examples of Leader Notes in Use

- Annotating complex assemblies with instructions.
- Indicating tolerances or specific manufacturing notes.
- Highlighting critical dimensions or features.
- Providing design change comments directly within the model.

Common Mistakes to Avoid

- Overlapping leader lines or text, reducing clarity.
- Using inconsistent font sizes for different notes.
- Placing leader notes too close to the feature, causing confusion.
- Forgetting to finish sketches after adding annotations, leaving them in an incomplete state.
- Overloading the model with too many leader notes, cluttering the workspace.

Best Practices and Pro Tips

- Use leader notes sparingly; prioritize clarity over quantity.
- Keep leader lines short and direct to avoid visual clutter.
- Use layer management to organize annotations.
- Double-check spelling and formatting before finalizing notes.
- Use leader annotations for critical or complex features to enhance communication.
- For detailed documentation, consider exporting annotations to PDFs or drawings.

Adding Leader Notes in Fusion 360: Alternative Method

In addition to sketching, you can also add annotations directly in the drawing workspace:

- Switch to the **Drawing** environment.
- Use the **Note** tool to add annotations with leader lines.
- This method is particularly useful for creating presentation-ready documentation.

Comparison: Fusion 360 vs. Traditional CAD Annotations

Feature	Fusion 360	Traditional CAD (e.g., AutoCAD, SolidWorks)
Ease of Use	User-friendly, integrated in model	Often requires dedicated annotation tools

Location Flexibility	In-Model sketches or drawings	Usually in separate annotation modules
Collaboration	Cloud-based, real-time editing	Local files, version control required
Update & Edit	Simple to revise within the model	May require re-importing or manual updates

Conclusion

Mastering how to add leader notes in Fusion 360 can significantly improve your ability to communicate design details clearly and professionally. By combining sketching techniques with annotation tools, you can create precise, informative leader notes that enhance your documentation. Remember to keep your annotations concise, well-placed, and organized to ensure they provide maximum value. As you practice, you'll become more efficient at adding meaningful notes that streamline your design process and facilitate effective communication with

manufacturers, collaborators, or clients.

FAQ

1. How do I add a leader note directly in Fusion 360 without sketching?

Ans: You can add a leader note by creating a drawing view and using the Note tool, or by sketching a leader line with text as part of a sketch.

2. Can I customize the leader line style in Fusion 360?

Ans: Yes, you can modify line styles, arrowheads, and text formatting within the sketch environment to customize your leader notes.

3. How do I move or edit an existing leader note?

Ans: Edit the associated sketch by selecting the leader line or text, then move or modify it before finishing the sketch again.

4. Is it possible to add multiple leader notes to a single feature?

Ans: Yes, you can add multiple leader lines with notes pointing to different parts or aspects of a feature within the same sketch.

5. Can leader notes be exported for manufacturing documentation?

Ans: Yes, exporting your model or drawing with annotations to PDF or DWG formats preserves leader notes for manufacturing or documentation purposes.

6. What are some common drawbacks of using sketches for leader notes?

Ans: They can clutter the workspace if overused and may require updates if the model features move or change.

7. How do I ensure my leader notes stay updated with model changes?

Ans: Revisit and adjust the associated sketches after modifications to maintain alignment and clarity.

About CADIN360

2026

CADIN360 Learning Tutorials is an educational platform focused on practical CAD, CAM, and CAE learning.

The platform provides clear, industry-oriented tutorials, design workflows, and real-world insights using tools such as Autodesk Fusion 360.

CADIN360 is created to help learners, students, and professionals build strong fundamentals and practical design skills in modern CAD workflows.

www.cadin360.com | support@cadin360.com

cadin360°
Learning Tutorials

Practice What You've Learned

2026

You've just completed this blog and learned important concepts in Autodesk Fusion 360.

To help you practice and apply what you've learned, the next pages include a sample from our Fusion 360 book .This sample contains practice exercises and real-world practice tasks designed to strengthen your skills.

What you'll find next:

- ✓ Practice exercises from the book
- ✓ A brief overview of the complete book
- ✓ Options to explore or request the full sample

Your hands-on Fusion 360 practice starts next.

© 2026 CADIN360. All Rights Reserved.

AUTODESK

FUSION 360 ALL IN ONE WORKBOOK

500+ PRACTICE EXERCISES

- Sketching
- 3D Modeling
- Assembly

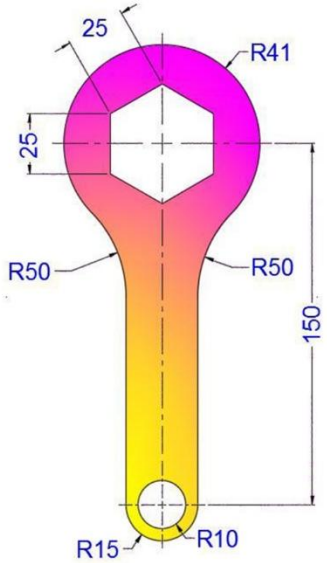

2D Sketching

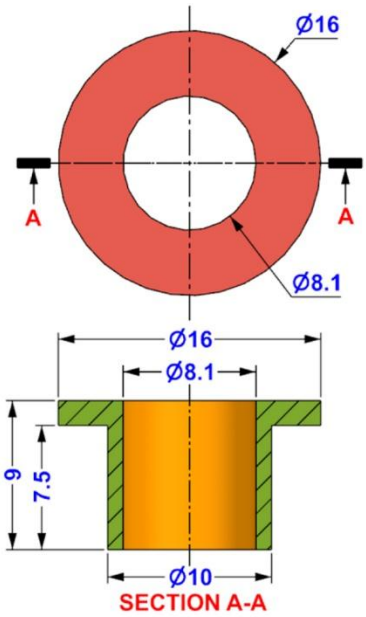

3D Modeling

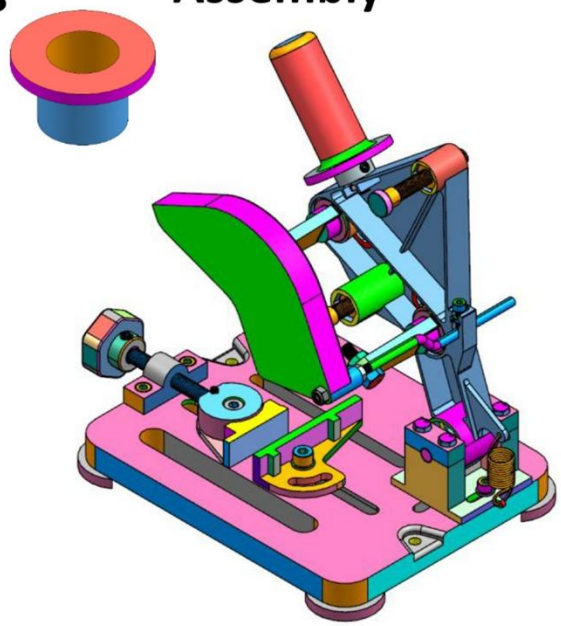

Assembly

SACHIDANAND JHA

AUTODESK

FUSION 360 ALL IN ONE WORKBOOK

500+ PRACTICE EXERCISES

2D Sketching • 3D Modeling • Assembly Drawings

SACHIDANAND JHA



©Copyright 2025 CADIN360, All rights reserved

Dear Reader,

Thank you for choosing the AUTODESK FUSION 360 ALL IN ONE WORKBOOK. This book is part of the CADIN360° learning series, created to help engineers, students, and professionals master Fusion 360 through structured and practical exercises.

This book contains over 500 carefully crafted practice drawings, including:

- 200 2D Sketching Exercises
- 200 3D Modeling Exercises
- Comprehensive Assembly Models with 150+ Individual Part Drawings

We founded CADIN360 in 2016 with the goal of delivering practical, high-quality learning material for CAD software. More than 9 years later, we're still committed to producing consistently exceptional books. With each of our titles, we're working hard to set a new standard for the industry. From the paper we print on, to the authors we work with, our goal is to bring you the best books available.

I hope you see all that reflected in these pages. I'd be very interested to hear your comments and get your feedback on how we're doing. Feel free to let me know what you think about this or any other CADIN360 book by sending me an email at cadin360@gmail.com

If you think you've found a technical error in this book, please visit https://cadin360.com/contact-us/.
Customer feedback is critical to our efforts at CADIN360.

Best regards,

Sachidanand Jha
Founder & CEO, CADIN360

cadin360°
Learning Tutorials

AUTODESK FUSION 360 ALL IN ONE WORKBOOK

Published by CADIN360
Website: cadin360.com
Copyright © 2025 by CADIN360, All rights reserved.

This book is copyrighted and the CADIN360 reserves all rights.
No part of this publication may be reproduced, stored in a retrieval system or transmitted, transcribed, stored in retrieval system or translated into any language, in any form or by any means, electronic, mechanical, photocopying, recording, scanning or otherwise, without the prior written permission of the publisher & Author.

Limit of Liability/Disclaimer of Warranty:

The publisher and the author make no representations or warranties with respect to the accuracy or completeness of the contents of this work and specifically disclaim all warranties, including without limitation warranties of fitness for a particular purpose. No warranty may be created or extended by sales or promotional materials. The advice and strategies contained herein may not be suitable for every situation. This work is sold with the understanding that the publisher is not engaged in rendering legal, accounting, or other professional services. If professional assistance is required, the services of a competent professional person should be sought. Neither the publisher nor the author shall be liable for damages arising herefrom. The fact that an organization or Web site is referred to in this work as a citation and/or a potential source of further information does not mean that the author or the publisher endorses the information the organization or Web site may provide or recommendations it may make. Further, readers should be aware that Internet Web sites listed in this work may have changed or disappeared between when this work was written and when it is read.

Examination Copies

Books received as examination copies in any form such as paperback and eBook are for review only and may not be made available for the use of the student. These files may not be transferred to any other party. Resale of examination copies is prohibited

Electronic Files & Usage Rights:

The electronic file/eBook in any form of this book is licensed to the original user only and may not be shared, distributed, resale or transferred to any other party. To access files, the user must contact **cadin360@gmail.com** with valid proof of purchase. Unauthorized distribution of the files is a violation of copyright law.

Disclaimer:

All product names, logos, brands, and registered trademarks mentioned in this publication are the property of their respective owners and are used for identification purposes only.

AUTODESK FUSION 360 ALL IN ONE WORKBOOK

- This book contains over 500 CAD practice exercises, organized as:

  1. 200 2D Sketching Exercises
  2. 200 3D Modeling Exercises
  3. Assembly Projects with 150+ Part Drawings

- This book is a practice workbook. It does not include step-by-step tutorials for creating 2D drawing, 3D models and Assembly.

- SI units (millimeters) are used for all dimensions.

- Third Angle Projection is used throughout this book.

- This book is for **AUTODESK FUSION 360** and also suitable for Other Feature-Based Modeling Software such as Inventor, Catia, SolidWorks, NX, Solid Edge, AutoCAD, PTC Creo etc.

- Designed for students, engineers, drafters, and designers looking for extensive CAD practice using Autodesk Fusion 360.

- The exercises cover a wide range of real-world modeling challenges—from simple sketches to complex assemblies—offering clear, concise, and structured drawing practice.

- Exercises are organized to gradually develop beginner to advanced-level design skills.

- Each exercise is self-contained, and can be completed independently.

- Assembly drawings follow industry standards to help improve visualization and multi-part modeling skills.

- All dimensions are in mm. Assume missing dimensions logically.

©Copyright 2025 CADIN360, All rights reserved

HOW TO USE THIS BOOK

This book contains over 500 CAD practice exercises, designed for self-paced learning using Autodesk Fusion 360 or any feature-based modeling software.

- 2D Sketching Exercises: Start here if you're a beginner or learning how to use the sketch environment.

- 3D Modeling Exercises: Follow after mastering sketching. Practice creating solid models using the provided dimensions.

- Assembly Drawings: Use after completing part models to understand multi-part assemblies, relationships, and constraints.

Tips for Best Use:

- Complete the exercises in order, or jump to any skill level you prefer.
- All dimensions are in millimeters.
- Where dimensions are missing, apply logic or practice estimation.
- This book is ideal for both students and professionals preparing for industry design work.

Note:
This book is available in multiple formats – **Black & White**, **Standard Color**, and **Premium Color** editions.

Happy learning!
– Team CADIN360

©Copyright 2025 CADIN360, All rights reserved



©Copyright 2025 CADIN360, All rights reserved

EXERCISE-01

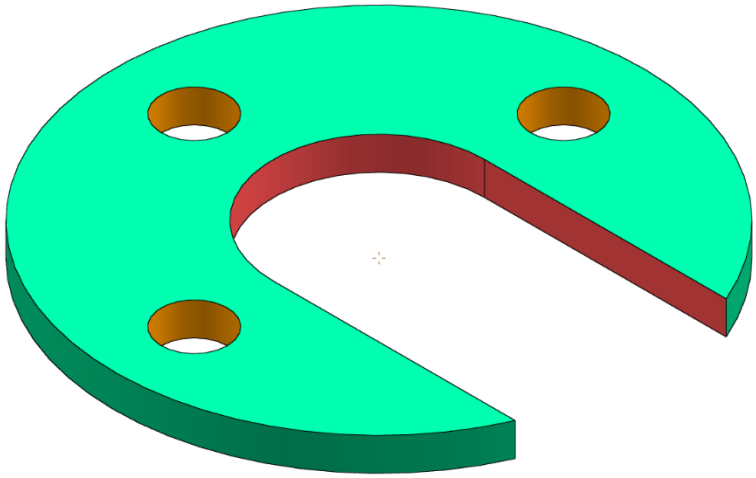

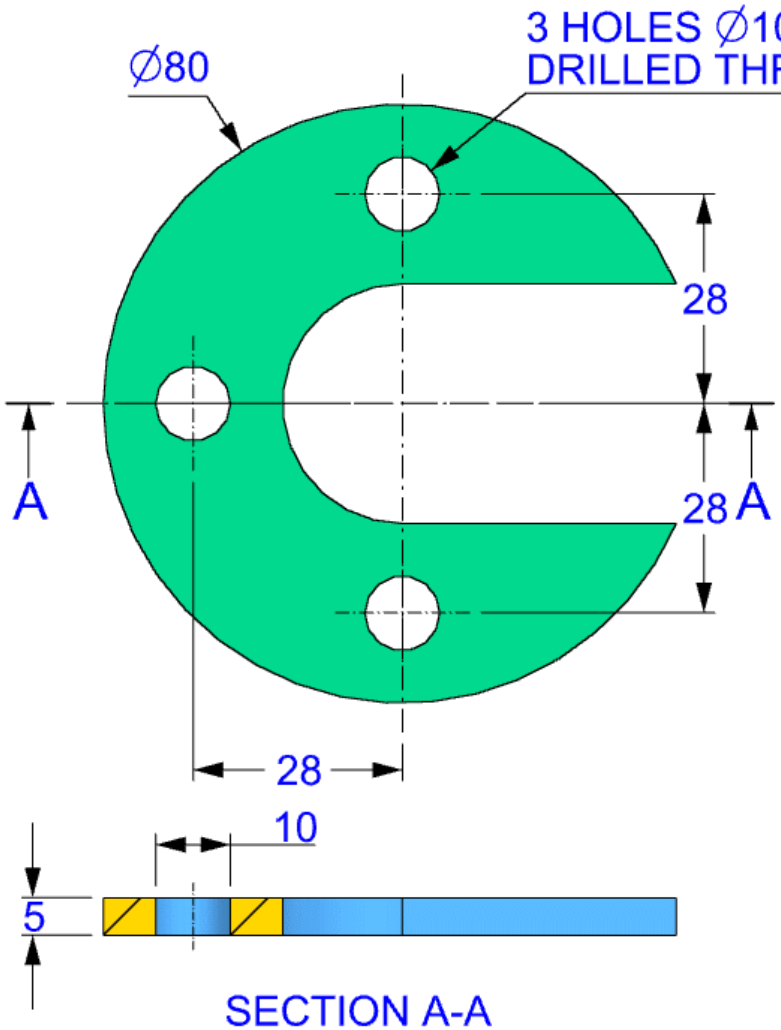

©Copyright 2019 CADin360, ALL Rights Reserved

Get The Complete Practice Sample

You downloaded a single Exercise PDF

The complete practice sample for this software includes multiple exercises and is not available inside this PDF..

What you will receive

- A software-specific complete sample PDF
- Multiple real practice exercises (not a single file)
- Same quality as our professional training material
- Compatible with the latest software version

How to get the complete sample

Click the button below and **enter a valid email address**.
The **complete sample PDF will be delivered automatically** after the form is submitted.

SEND THE COMPLETE SAMPLE TO MY EMAIL

END OF SAMPLE

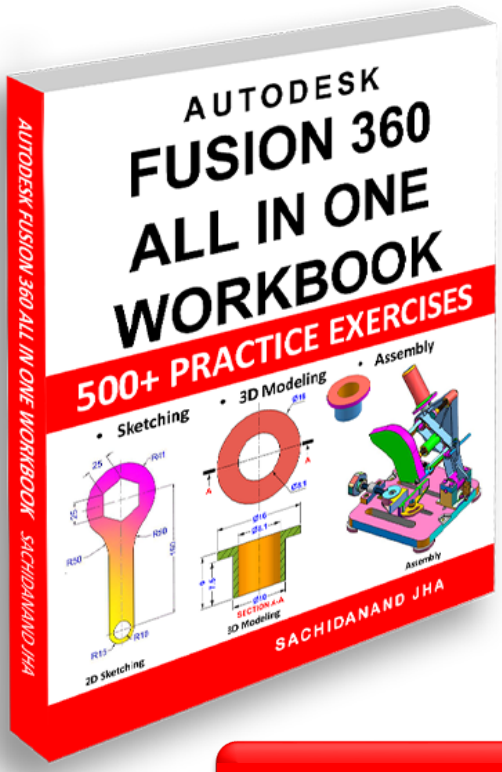

What's Included in the FUSION 360 ALL IN ONE WORKBOOK?

- ✓ Books contains exercises of Sketching, 3D Modeling & Assembly.
- ✓ 500+ Practice Exercises with Dimensions
- ✓ Full Assembly STEP Files (.stp format) – Compatible with all major CAD software
- ✓ Get 200 3D Exercises in .f3d file format
- ✓ Get All Assembly Exercises in .STP file
- ✓ Instant Download Link - Sent to Your Email After Payment
- ✓ Lifetime Access to All Files

Get the Paperback book on Amazon

Get the Complete Bundle for Only $27.99

Special Offer for Students & Learners

Are you a Student, Unemployed or Financially struggling ?
Get this special Bundle only for $19.99

Special Offer for Only $19.99

©Copyright 2025 CADIN360, ALL Rights Reserved

Thank You for Learning with Us!

Thank you for choosing the **AutoDesk Fusion 360 ALL IN ONE WORKBOOK**. We hope this book helped you strengthen your Fusion 360 skills through hands-on practice and real-world design challenges.
Your feedback means the world to us!
If you found this book helpful, please take a moment to leave a **review** on the Amazon where you purchased it. Your kind words not only motivate us but also help other learners discover our resources. Scan the QR.

⭐ A good review goes a long way!

📚 Explore More CAD Practice Books
Looking to continue your learning journey?
We offer similar practice-based books for over **30 CAD software platforms**, including:

- AutoCAD
- SolidWorks
- FreeCAD
- TinkerCAD
- TurboCAD
- Siemens NX
- CATIA
- Creo
- SketchUp and many more...

Visit our website 👉 **www.cadin360.com** to browse the complete collection.

💬 Stay Connected
Have suggestions, feedback, or just want to say hello?
We'd love to hear from you!
📧 Email: cadin360@gmail.com
🌐 Website: www.cadin360.com

🚀 Keep Practicing. Keep Designing.
Whether you're a beginner or a pro, **practice is the key** to mastering any CAD software.
We're honored to be a part of your journey.
Happy Designing!
– Team **Cadin360**

Master Fusion 360 with Real-World Practice Exercises

This book contains over 500 Fusion 360 practice exercises including sketching, 3D modeling, and assembly drawings. Designed for students, engineers, and professionals to build practical CAD modeling skills.

AUTODESK FUSION 360 ALL IN ONE WORKBOOK

This book contains:-

- 200 2D Sketching Exercises
- 200 3D Modeling Exercises
- Multi-part Assembly Exercises & Detailed Drawings
- All drawings in 3rd Angle projection
- All dimensions are in mm(metric system)